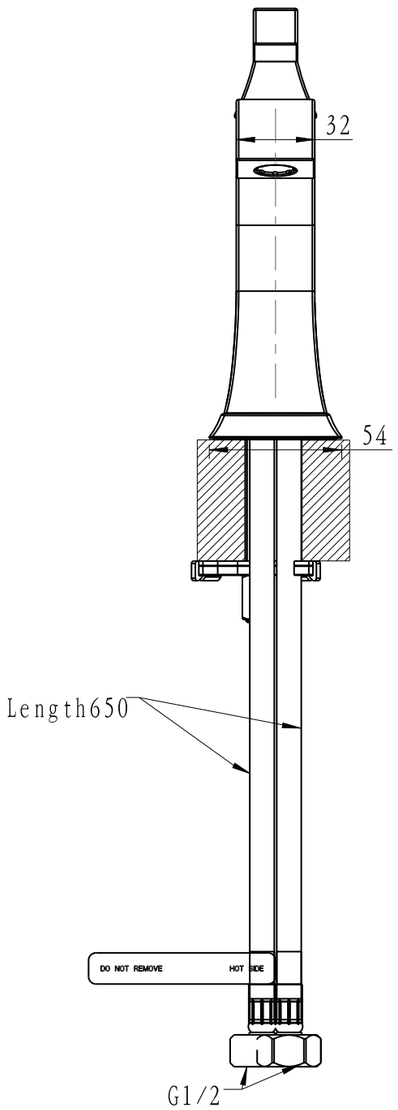
32
54
Length650
DO NOT REMOVE
HOT SIDE
G1/2

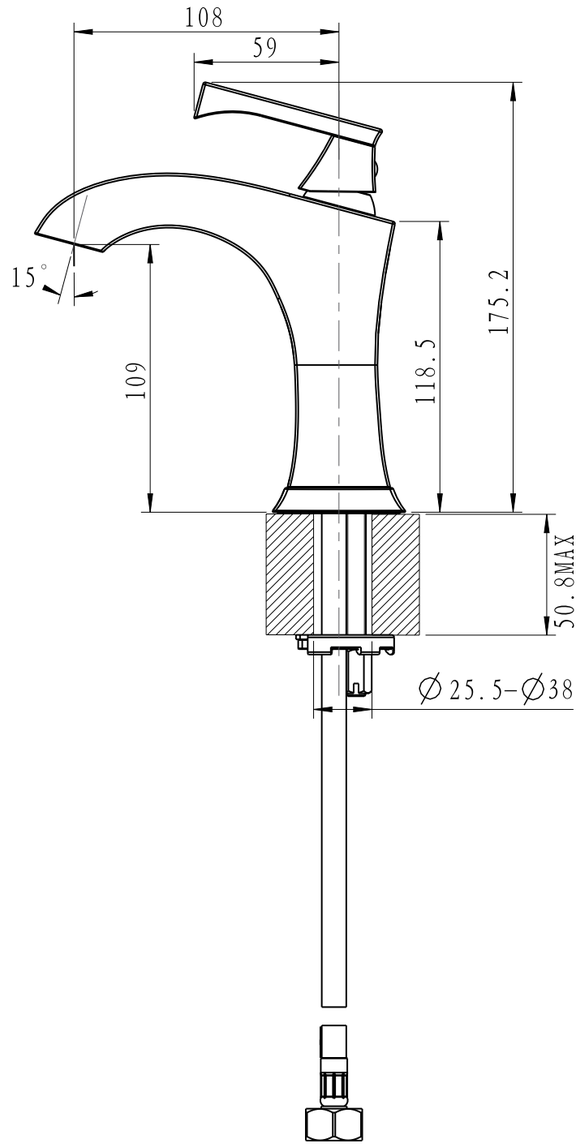
108
59
15°
109
118.5
175.2
50.8MAX
∅25.5-∅38